THE PROPERTY OF THIS DRAWING IS ESTABLISHED BY LAW
IT IS FORBIDDEN TO REPRODUCE IT OR SHOW IT TO THIRD PARTY
WITHOUT A WRITTEN AGREEMENT.

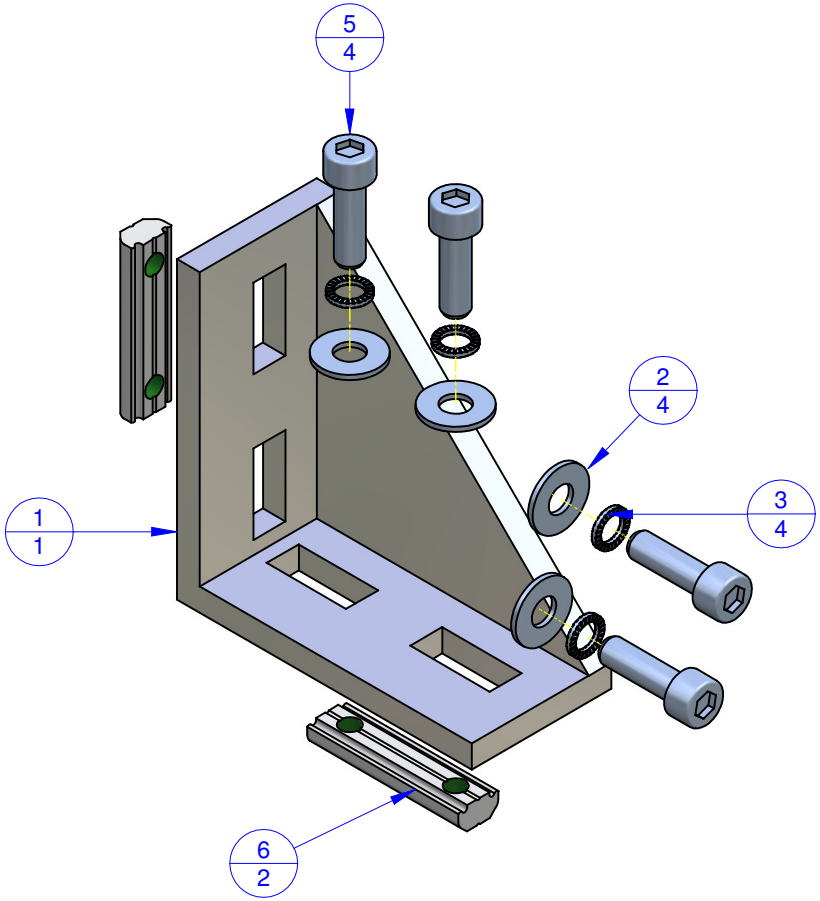

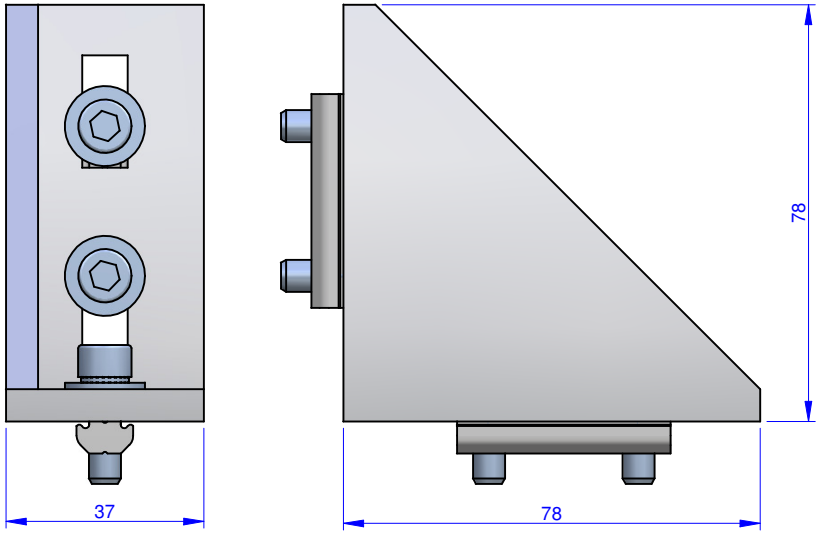

Obgect Number	Name	QTY
1	WIV.JU.80.E	1
2	R.6.L	4
3	R.6.SCH	4
5	V.TCE6X20	4
6	CA.GWP.6.28	2

MODIFICATIONS: VARIED DIMENSIONS AS OF DATE:
1 2 3 4 5 6

MODIFICATIONS: VARIED DIMENSIONS AS OF DATE:
7 8 9 10 11 12

Format A3
UNI 936-76

FP Services

GENERAL TOLERANCE:
UNI - ISO 2768
CLASSE f

DESCRIPTION

DESIGNED FROM
FPSERVICES

DATE 06/2014

WEIGHT 0,178 kg
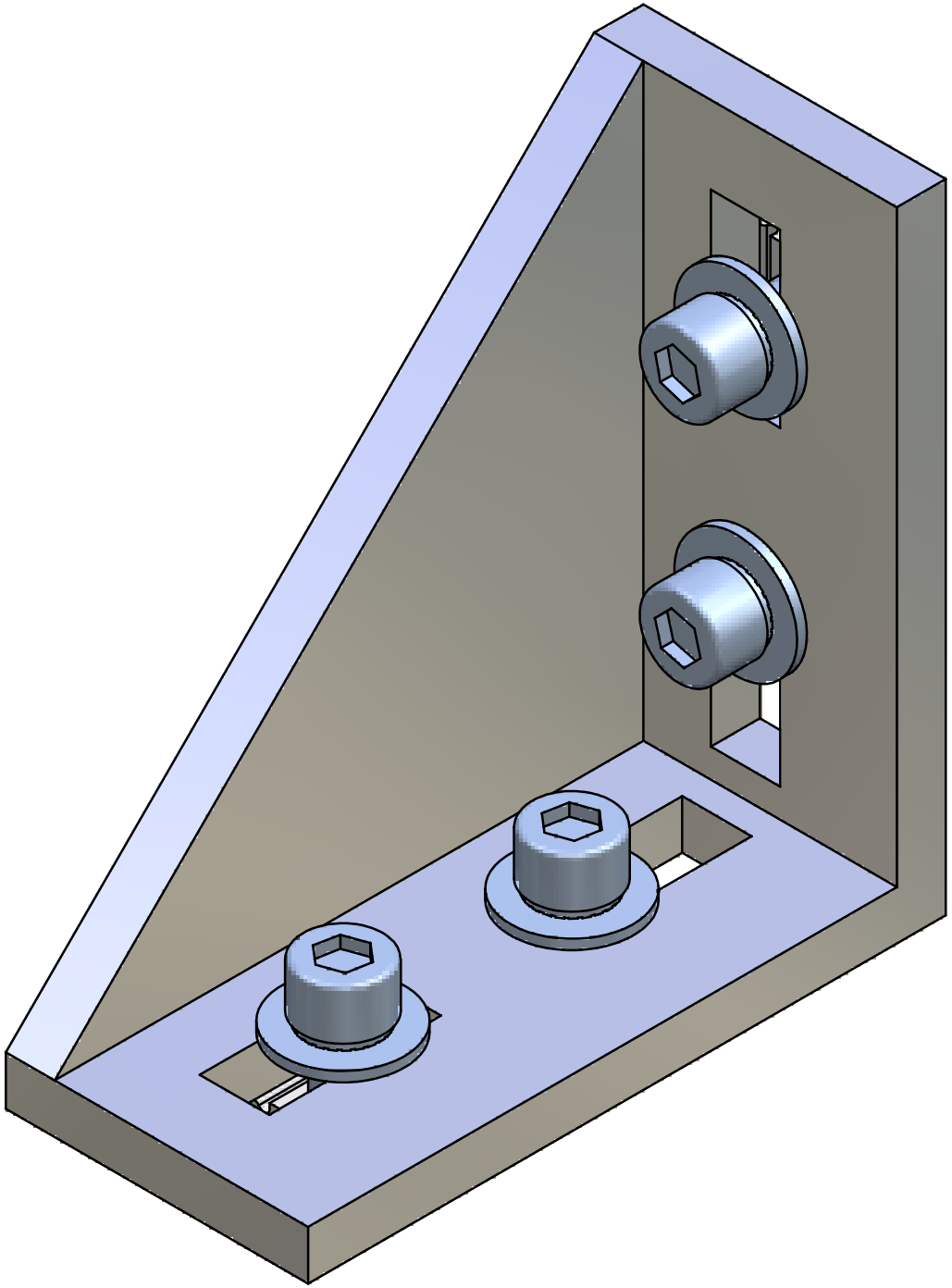
CODE **CA.WIV.JU.80.E**